Instructions for the use - Installation advices

COOKERS

100% ELBA QUALITY MADE IN ITALY

ELBA

TALENT FOR COOKING

Made in Italy

Dear Customer,

Thank you for having purchased and given your preference to our product.

The safety precautions and recommendations reported below are for your own safety and that of others. They will also provide a means by which to make full use of the features offered by your appliance.

Please preserve this booklet carefully. It may be useful in future, either to yourself or to others in the event that doubts should arise relating to its operation.

This appliance must be used only for the task it has explicitly been designed for, that is for cooking foodstuffs. Any other form of usage is to be considered as inappropriate and therefore dangerous.

The manufacturer declines all responsibility in the event of damage caused by improper, incorrect or illogical use of the appliance.

IMPORTANT SAFETY PRECAUTIONS AND RECOMMENDATIONS

IMPORTANT: This appliance is designed and manufactured solely for the cooking of domestic (household) food and is not suitable for any non domestic application and therefore should not be used in a commercial environment.
The appliance guarantee will be void if the appliance is used within a non domestic environment i.e. a semi commercial, commercial or communal environment.

Read the instructions carefully before installing and using the appliance.

- After having unpacked the appliance, check to ensure that it is not damaged and that the oven door closes correctly.
  In case of doubt, do not use it and consult your supplier or a professionally qualified technician.
- Packing elements (i.e. plastic bags, polystyrene foam, nails, packing straps, etc.) should not be left around within easy reach of children, as these may cause serious injuries.
- Some appliances are supplied with a protective film on steel and aluminium parts. **This film must be removed before using the appliance.**
- IMPORTANT: The use of suitable protective clothing/gloves is recommended when handling or cleaning this appliance.
- Do not attempt to modify the technical characteristics of the appliance as this may become dangerous to use. The manufacturer declines all responsibility for any inconvenience resulting from the inobservance of this condition.
- CAUTION: this appliance must only be installed in a permanently ventilated room in compliance with the applicable regulations.
- Do not operate your appliance by means of an external timer or separate remote-control system.
- Do not carry out cleaning or maintenance operations on the appliance without having previously disconnected it from the electric power supply.

- WARNING: Ensure that the appliance is switched off before replacing the oven lamp to avoid the possibility of electric shock.
- Do not use a steam cleaner because the moisture can get into the appliance thus make it unsafe.
- Do not touch the appliance with wet or damp hands (or feet).
- Do not use the appliance whilst in barefoot.
- If you should decide not to use this appliance any longer (or decide to substitute another model), before disposing of it, it is recommended that it be made inoperative in an appropriate manner in accordance to health and environmental protection regulations, ensuring in particular that all potentially hazardous parts be made harmless, especially in relation to children who could play with unused appliances.
- The various components of the appliance are recyclable. Dispose of them in accordance with the regulations in force in your country. If the appliance is to be scrapped, remove the power cord.
- After use, ensure that the knobs are in the off position.
- Children less than 8 years of age shall be kept away unless continuously supervised.
- This appliance can be used by children aged from 8 years and above and persons with reduced physical, sensory or mental capabilities or lack of experience and knowledge if they have been given supervision or instruction concerning use of the appliance in a safe way and understand the hazards involved. Children shall not play with the appliance. Cleaning and user maintenance shall not be made by children without supervision.
- The manufacturer declines all liability for injury to persons or damage to property caused by incorrect or improper use of the appliance.
- WARNING: During use the appliance and its accessible parts become hot; they remain hot for some time after use.
  - Care should be taken to avoid touching heating elements (on the hob and inside the oven).
  - The door is hot, use the handle.

- To avoid burns and scalds, young children should be kept away.

- Make sure that electrical cables connecting other appliances in the proximity of the cooker cannot come into contact with the hob or become entrapped in the oven door.
- WARNING: Unattended cooking on a hob with fat or oil can be dangerous and may result in fire. NEVER try to extinguish a fire with water, but switch off the appliance and then cover flame e.g. with a lid or a fire blanket.
- WARNING: Danger of fire: do not store items on the cooking surfaces.
- WARNING: If the hob is cracked or otherwise damaged by falling objects etc., disconnect the appliance from the electrical power supply to avoid the possibility of electric shock and call Customer Service.
- WARNING: When correctly installed, your product meets all safety requirements laid down for this type of product category. However special care should be taken around the rear or the underneath of the appliance as these areas are not designed or intended to be touched and may contain sharp or rough edges, that may cause injury.
- FIRST USE OF THE OVEN - it is advised to follow these instructions:
  - Furnish the interior of the oven as described in the chapter “CLEANING AND MAINTENANCE”.
  - Switch on the empty oven on max to eliminate grease from the heating elements.
  - Disconnect the appliance from the electrical power supply, let the oven cool down and clean the interior of the oven with a cloth soaked in water and neutral detergent; then dry carefully.
- CAUTION: Do not use harsh abrasive cleaners or sharp metal scrapers to clean the oven door glass since they can scratch the surface, which may result in shattering of the glass.
- Do not line the oven walls or base with aluminium foil. Do not place baking trays or the drip tray on the base of the oven chamber.

- FIRE RISK! Do not store flammable material in the oven or in the storage compartment.
- Always use oven gloves when removing the shelves and food trays from the oven whilst hot.
- Do not hang towels, dishcloths or other items on the appliance or its handle – as this could be a fire hazard.
- Clean the oven regularly and do not allow fat or oils to build up in the oven base or tray. Remove spillages as soon as they occur.
- Do not stand on the cooker or on the open oven door.
- Always stand back from the appliance when opening the oven door to allow steam and hot air to escape before removing the food.
- SAFE FOOD HANDLING: Leave food in the oven for as short a time as possible before and after cooking. This is to avoid contamination by organisms which may cause food poisoning. Take particular care during warmer weather.
- WARNING: Take care NOT to lift the cooker by the door handle.

2 COOKING HOBS

Fig. 1.1

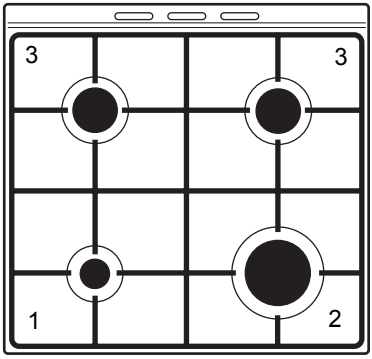

Models:
- **E K55 X 220**
- **E 5540 FG2 BK**

Fig. 1.2

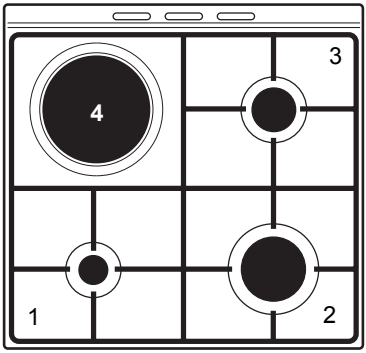

Models:
- **E 5531 FG2 BK**
- **E K55 X 320**

GAS BURNERS AND ELECTRIC HOTPLATES

1. Auxiliary burner (A)	1,00 kW
2. Rapid burner (R)	3,00 kW
3. Semi-rapid burner (SR)	1,75 kW
4. Rapid electrical plate Ø 145 mm	1500 W

2 CONTROL PANELS

Models:
- **E K55 X 220**
- **E 5540 FG2 BK**

Fig. 2.1

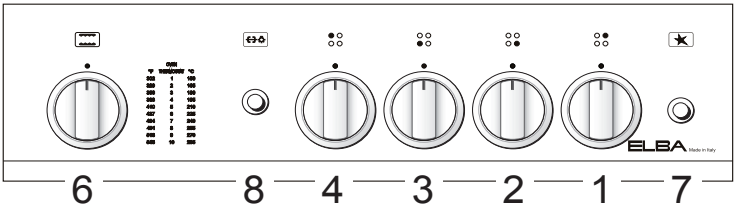

Models:
- **E 5531 FG2 BK**
- **E K55 X 320**

Fig. 2.2

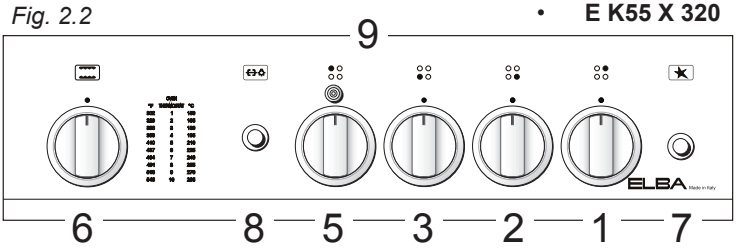

CONTROLS DESCRIPTION

1. Rear right burner control knob
2. Front right burner control knob
3. Front left burner control knob
4. Rear left burner control knob
5. Rear left electric plate control knob
6. Gas oven/grill control knob
7. Gas burners electronic igniter control button (cooktop burners - some models only cooktop burners and gas oven/grill)
8. Oven light/Rotisserie control button
9. Electrical plate indicator light

CAUTION: If the burner is accidentally extinguished, turn the gas off at the control knob and wait at least 1 minute before attempting to relight.

CAUTION:
Gas appliances produce heat and humidity in the environment in which they are installed.

Ensure that the cooking area is well ventilated by opening the natural ventilation grilles or by installing an extractor hood connected to an outlet duct.

CAUTION:
If the appliance is used for a prolonged time it may be necessary to provide further ventilation by opening a window or by increasing the suction power of the extractor hood (if fitted).

3 USE OF COOKING HOB

Each burner is controlled by a gas tap (fig. 3.1) assuring the opening and the closing of the gas supply.
Make the knob symbols match with the indicator on the control panel to obtain:

- symbol : off
- symbol : full on (nominal rate)
- symbol : reduced rate

√ The maximum aperture position permits rapid boiling of liquids, whereas the minimum aperture position allows slower warming of food or maintaining boiling conditions of liquids.

√ To reduce the gas flow to minimum, rotate the knob further anti-clockwise to point the indicator towards the small flame symbol.

√ Other intermediate operating adjustments can be achieved by positioning the indicator between the maximum and minimum aperture positions, and never between the maximum aperture and closed positions.

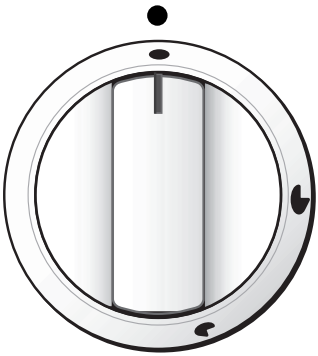

Fig. 3.1

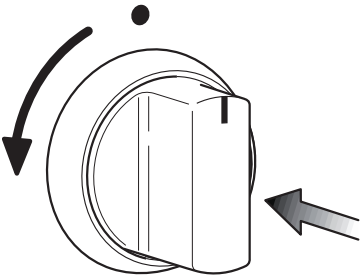

Fig. 3.2

N.B. When the cooker is not being used, set the gas knobs to their closed positions and also close the cock valve on the gas bottle or the main gas supply line.

Caution!
The cooking hob becomes very hot during operation.
Keep children well out of reach.

LIGHTING THE BURNERS

To ignite the burner, the following instructions are to be followed:

1. Press in the corresponding knob and turn counter-clockwise (fig. 3.2) to the full flame position marked by the symbol (fig. 3.1).
2. Press the ignition button marked by the symbol (fig. 3.3).
   The sparks produced by the electrodes situated next to the burner will light the selected burner.
   In the case of a mains failure light the burner with a match or lighted taper.
3. Adjust the gas valve to the desired position.

To turn it off, turn the knob towards the right, up to the safety click.

If your local gas supply makes it difficult to light the burner with the knob set to maximum, set the knob to minimum and repeat the operation.

CHOICE OF THE BURNER

On the control panel, near every knob, there is a diagram that indicates which burner is controlled by that knob.

The suitable burner must be chosen according to the diameter and the capacity used.

As an indication, the burners and the pots must be used in the following way:

DIAMETERS OF PANS WHICH MAY BE USED ON THE BURNERS

BURNERS	MINIMUM	MAXIMUM
Auxliliary	12 cm	14 cm
Semi-rapid	16 cm	24 cm
Rapid	24 cm	26 cm
Wok pan	Max 36 cm	
do not use pans with concave or convex bases		

It is important that the diameter of the pot be suitable to the potentiality of the burner so as not to compromise the high output of the burners and therefore energy waste.

A small pot on a large burner does not give you a boiling point in a shorten amount of time since the capacity of heat absorption of a liquid mass depends on the volume and the surface of the pot.

Fig. 3.3

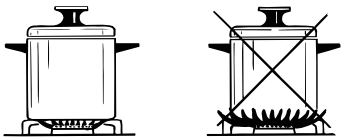

Fig. 3.4

CORRECT USE OF RAPID BURNER (Some models only)

The flat-bottomed pans are to be placed directly onto the pan-support.
When using a WOK you need to place the supplied stand in the burner to avoid any faulty operation of the rapid burner (fig. 3.5a - 3.5b).

IMPORTANT:

The special grille for wok pans (fig. 3.5b) **MUST BE PLACED ONLY** over the pan-rest for the rapid burner.

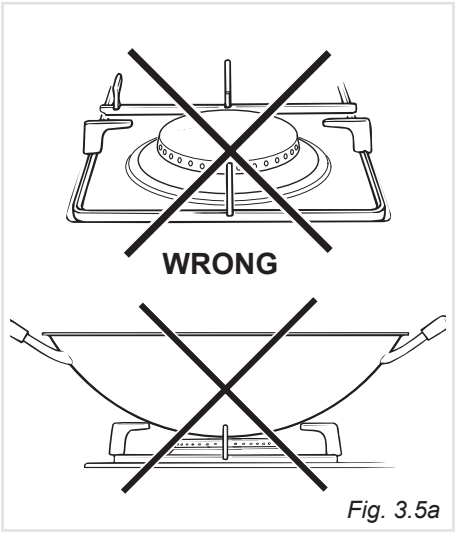

Fig. 3.5a

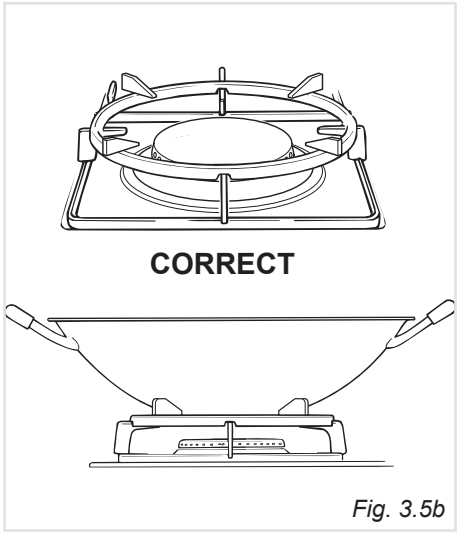

Fig. 3.5b

ONLY FOR MODELS WITH ELECTRIC HOTPLATE

RAPID HOTPLATE

To switch on the rapid hotplate, turn the knob (fig. 3.6) onto the desired position; the numbers "**1**" to "**6**" indicate the working positions with the increase of temperature according to the number.
Once boiling point has been reached, reduce the input according to the heating intensity desired, keeping in mind that the plate will continue to heat for 5 minutes after having been turned off.

The features of this plate, which is equipped with a heat limiter, allow:

- reaching the temperature rapidly
- maximum exploitation of the input with flat bottom pots
- the limitation of input in the case of unsuitable pots.

PROPER USE OF THE ELECTRIC HOTPLATE (fig. 3.7)

When the pan comes to the boil, turn the heat down to the level desired.
Remember that the hotplate will continue to produce heat for about five minutes after it has been turned off.
While using the electric hotplate, you must:

- avoid keeping it on without something on it;
- avoid pouring liquids on it while it is hot;
- use flat-bottomed (electric hotplate type) pots and pans only
- use cooking receptacles which cover as much of the surface of the hotplate as possible.
- to save electricity, use lids whenever possible.
- never cook food directly on the hotplate: always use a pan or suitable container.

An indicator light located close to the knob signals that the hotplate is operating

Caution! The cooking hob becomes very hot during operation.
Keep children well out of reach.

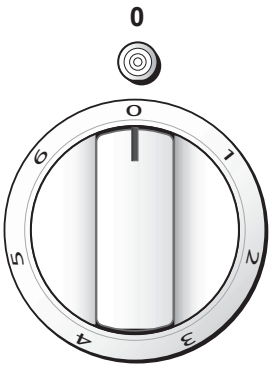

Fig. 3.6

Never cook food directly on the electric hotplates! Always use a saucepan or special container.

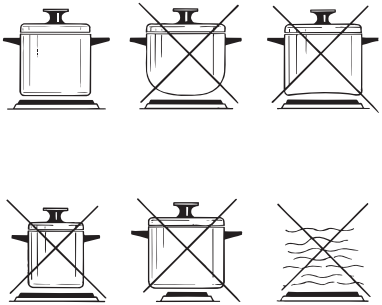

Fig. 3.7

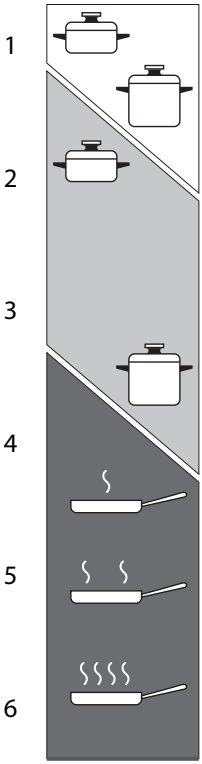

Heating

Cooking

Roasting-frying

Fig. 3.8

ELECTRIC HOTPLATE USAGE TABLE

Position of switch	TYPE OF COOKING
0	Switched OFF
1 2	For melting operations (butter, chocolate).
2	To maintain food hot and to heat small quantities of liquid (sauces, eggs).
3	To heat bigger quantities; to whip creams and sauces. (vegetables, fruits, soups).
3 4	Slow boiling, i.e.: boiled meats, spaghetti, soups, continuations of steam, cooking of roasts, stews, potatoes.
4	For every kind of frying, cutlets, uncovered cooking, i.e.: risotto.
4 5	Browning of meats, roasted potatoes, fried fish, omelettes, and for boiling large quantities of water.
6	Fast frying, grilled steaks, etc.

After a short period of use, experience will teach you which setting is the right one for your needs.

4 USE OF THE GAS OVEN

The glass on the oven door reaches high temperatures during operation. Keep children away.
The cooker lid must be kept open when the gas oven or grill is in use.

GENERAL FEATURES

The oven is furnished completely clean; it is advisable, however, upon first use, to turn the oven on to the maximum temperature to eliminate possible traces of grease from the oven burner.
The same operation should be followed for grill burner.

The gas oven is provided:

- One gas burner (wattage: 3,20 kW) located at the bottom (only for the models E K55..220, E K55..320: providing safety device and electric ignition).
- One gas grill (wattage: 2,00 kW), placed on the top (only for the models E K55..220, E K55..320: providing safety device and electric ignition).

WARNING:
The door is hot, use the handle.
During use the appliance becomes hot. Care should be taken to avoid touching heating elements inside the oven.

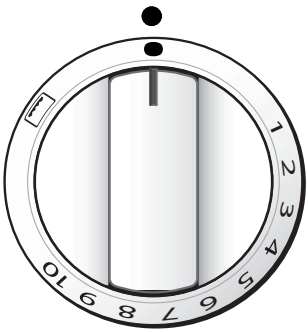

Fig. 4.1

OVEN BURNER

It carries out normal “oven cooking”.
The gas flow to the burner is regulated by a thermostat which allow to maintain the oven temperature constant.
The control of the temperature is assured by a thermostatic probe positioned inside the oven.
The probe must be always kept in its housing, in a clean condition, as an incorrect position or encrustment may cause an alteration in the control of the temperature.
The numbers **1** to **10** printed on the knob indicate the increasing oven temperature value (see table 4.5).
To regulate the temperature, make the chosen number of the knob (fig. 4.1) match with the indicator on the control panel.

Only for the models E K55..220, E K55..320: the gas thermostat controlling the gas supply to the burner is equipped with a safety device which automatically stops the gas flow in case of flame extinction.

IGNITION OF THE OVEN BURNER

Models E 5540FG2-.., E 5531FG2-..

ATTENTION: Never turn the gas thermostat before approaching a flame to the hole "A" of the floor.

WARNING: Risk of explosion! The oven door must be open during this operation.

To ignite the oven burner:

1. **Open the oven door to the full extent. WARNING: Risk of explosion! The oven door must be open during this operation.**
2. Approach a flame to hole "**A**" (fig. 4.2).
3. Press in the oven control knob and turn counter-clockwise to position **10** (figs. 4.1, 4.3).
   Never continue this operation for more than 15 seconds. If the burner has still not ignited, wait for about 1 minute prior to repeating the ignition.
4. Gently close the oven door and set the oven control knob to the required temperature.

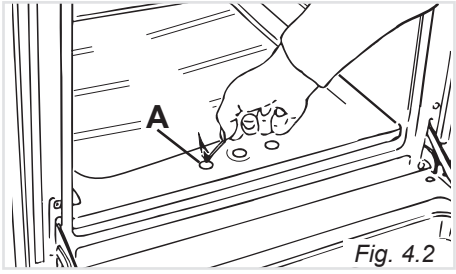

Fig. 4.2

Models E K55..320, E K55..220

ATTENTION: Never turn the gas thermostat before approaching a flame to the hole "A" of the floor.

WARNING: Risk of explosion! The oven door must be open during this operation.

To ignite the oven burner:

1. **Open the oven door to the full extent. WARNING: Risk of explosion! The oven door must be open during this operation.**
2. Press the button marked with a star symbol (fig. 4.4) and keep pressed until the oven burner ignites. Press in the oven control knob and turn counter-clockwise to position **10** (figs. 4.1, 4.3). Keep the knob pressed. To light the oven burner manually, approach a flame to the hole '**A**' of the oven floor (fig. 4.2).
3. Never continue this operation for more than 15 seconds. If the burner has still not ignited, wait for about 1 minute prior to repeating the ignition.
4. After lighting the burner, wait a few seconds before releasing the knob (until the safety valve stays open).
5. Gently close the oven door and set the oven control knob to the required temperature.

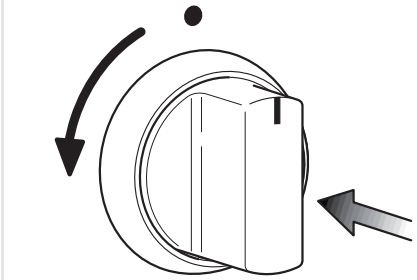

Fig. 4.3

Models E K55..320, E K55..220

If the flame extinguishes for any reason, the safety valve will automatically shut off the gas supply to the burner.

To re-light the burner, first turn the oven control knob to position ● , **wait for at least 1 minute and then repeat the lighting procedure.**

Fig. 4.4

OVEN COOKING

To cook, before introducing the food, preheat the oven to the desired temperature.

When the oven has reached the desired temperature, introduce the food, control the cooking time and turn off the oven 5 minutes before the theoretical time to recuperate the stored heat.

For efficient oven preheating, we recommend that grill tray and rack are removed from the oven and replaced after about 15 minutes.

COOKING EXAMPLES

Temperatures are approximate as they vary depending on the quality and amount of food.

Remember to use ovenproof dishes and to adjust the oven temperature during cooking if necessary.

Table 4.5

°F	OVEN THERMOSTAT	°C
302	1	150
329	2	165
356	3	180
383	4	195
410	5	210
437	6	225
464	7	240
491	8	255
518	9	270
545	10	285

THERMOSTAT POSITION	DISHES
1	Heating of foods
1	Meringue - Fruit pies Cooked fruit
1 - 2	Cakes - Amaretti Vegetables
2 - 3	Lasagna - Cakes
3 - 4	Roast veal - Pie crusts
5 - 6	Wild game - Birds Small fish - Roast pork
6 - 7	Large fish - Roast beef
7 - 8	Pizza - Red meats
8 - 9	Toasted sandwiches
10	Oven cleaning

IGNITION OF THE GRILL BURNER (Models E 5540FG2-.., E 5531FG2-..)

ATTENTION: Never turn the gas thermostat before approaching a flame to the pipe of the burner.

WARNING: Risk of explosion! The oven door must be open during this operation.

To ignite the grill burner:

1. **Open the oven door to the full extent. WARNING: Risk of explosion! The oven door must be open during this operation.**
2. Apply a flame to pipe of the grill burner, as shown in fig. 4.6.
3. Press in the oven control knob and turn clockwise to the position marked by the symbol ▭ (figs. 4.1, 4.7).
   Never continue this operation for more than 15 seconds. If the burner has still not ignited, wait for about 1 minute prior to repeating the ignition.
4. Do not close completely the oven door. The grill must always be used with the oven door slightly open and with shield "**A**" mounted (fig. 4.9). See specific instructions in the section 'USE OF THE GRILL'.

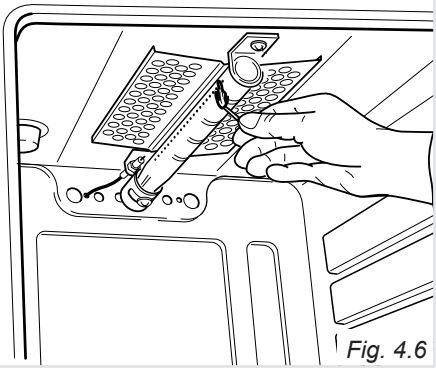

Fig. 4.6

IGNITION OF THE GRILL BURNER (Models E K55..220, E K55..320)

To ignite the grill burner:

1. **Open the oven door to the full extent. WARNING: Risk of explosion! The oven door must be open during this operation.**
2. Press the button marked with a star symbol (fig. 4.4) and keep pressed until the grill ignites. Press in the oven control knob and turn clockwise to the position marked by the symbol ▭ (figs. 4.1, 4.7). Keep the knob pressed. In case of mains failure, press the knob firmly and put a lit match or taper to the pipe of the burner (fig. 4.6).
3. Never continue this operation for more than 15 seconds. If the burner has still not ignited, wait for about 1 minute prior to repeating the ignition.
4. After lighting the burner, wait a few seconds before releasing the knob (until the safety valve stays open).
   Do not close completely the oven door. The grill must always be used with the oven door slightly open and with shield "**A**" mounted (fig. 4.9). See specific instructions in the section 'USE OF THE GRILL'

If the flame extinguishes for any reason, the safety valve will automatically shut off the gas supply to the burner.
To re-light the burner, first turn the oven control knob to position ● , **wait for at least 1 minute and then repeat the lighting procedure.**

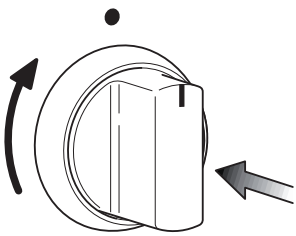

Fig. 4.7

USE OF THE GRILL

Very important: the grill must always be used with the oven door slightly open and with shield "A" mounted (fig. 4.9)

The oven door becomes very hot during operation. Keep children away.

Mount shield "**A**" which permits to protect the control panel from the heat.

Turn on the grill, as explained in the preceding paragraphs and let the oven preheat for about 5 minutes with the door slightly open.

Introduce the food to be cooked, positioning the rack as close to the grill as possible.

The dripping pan should be placed under the rack to catch the cooking juices and fats.

Note: It is recommended that you do not grill for longer than 30 minutes at any one time.

OVEN LIGHT

The oven is equipped with a light that illuminates the oven to enable visually controlling the food that is cooking.

This light is controlled by a switch on the control panel (fig. 4.8)

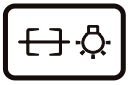

Fig. 4.8

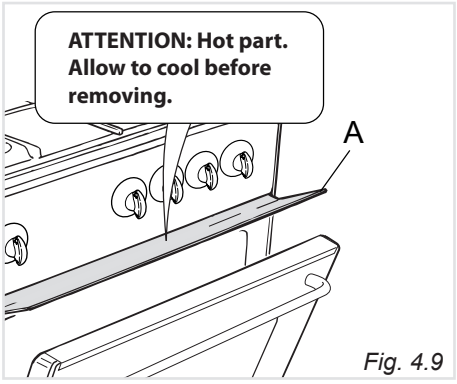

Fig. 4.9

ROTISSERIE

The oven is equipped with a rotisserie for cooking on the spit using the grill.

This device is made up of:

- an electrical motor mounted on the rear part of the oven;
- a stainless steel rod, equipped with a detachable athermic grip and 2 recordable forks;
- a rod support to be inserted into the central rack holders of the oven.

The rotisserie motor is operated by the switch indicated by the symbol on the control panel (fig. 4.8).

USE OF THE ROTISSERIE

Very important: the rotisserie must always be used with the oven door slightly open and with shield "A" mounted (fig. 4.9).

- Insert the dripping pan into the lowest rack holders of the oven and insert the rod support into the intermediate rack holders.
- Put the meat to be cooked onto the rod, being careful to secure it in the center with the special forks.
- Insert the rod into the motor opening and rest it onto the support of the spit collar; then remove the grip by turning it to the left.

The rotation direction of the rotisserie can be either clockwise or counter-clockwise.

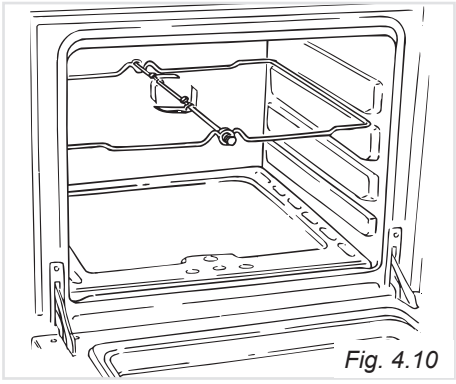

Fig. 4.10

5 ADVICE FOR THE CONSUMER

GLASS LID (models with glass lid)

For cleaning purposes, the lid can be easily removed upwards once taken to the upright position.
Should the hinges slip off, replace them in their housing being careful that:

- The right housing must receive the hinge marked "**D**" while the left housing must receive the hinge marked "**S**" (fig. 5.1)

REGULATING OF THE BALANCE

Lower the lid and check the correct balance. While opened at 45° it should hang up.
If necessary, register the calibration of the hinge springs using the screws "**R**" (fig. 5.1).

Models with glass lid

Do not shut lid when burner alight.

ATTENTION

- ✓ Do not lower the glass lid when the gas burner or electrical plates are still hot or when the oven is working or still hot.
- ✓ Do not lay on the glass lid hot pans and heavy kitchen utensils.
- ✓ Dry off any liquid whitch may have spilt on the cover before opening it.

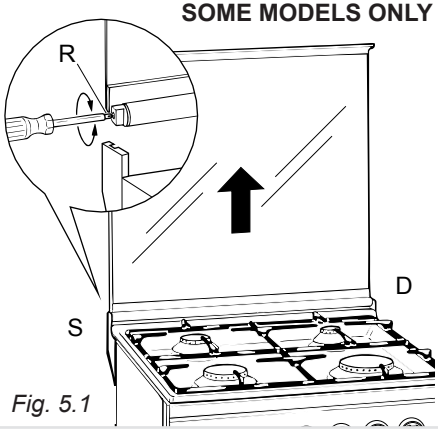

Fig. 5.1

GENERAL ADVICE

- **Important: before any operation of cleaning and maintenance disconnect the appliance from the electrical network (only for models with electrical components).**
- When the appliance is not being used, it is advisable to keep the gas tap closed.
- The periodical lubrication of the gas taps must be done only by specialized personnel.
- If a tap becomes stiff, do not force; contact your local After Sales Service Centre.
- It is advisable to clean when the appliance is cold and especially when cleaning the enamelled parts.
- Avoid leaving alkaline or acidic substances (lemon juice, vinegar, etc.) on the surfaces.
- Avoid using cleaning products with a chlorine or acidic base.
- **Important: The use of suitable protective clothing/gloves is recommended when handling or cleaning of this appliance.**

WARNING: When correctly installed, your product meets all safety requirements laid down for this type of product category. However special care should be taken around the rear or the underneath of the appliance as these areas are not designed or intended to be touched and may contain sharp or rough edges, that may cause injury.

ENAMELLED PARTS

All the enamelled parts must be cleaned with a sponge and soapy water or other non-abrasive products.
Dry preferably with a microfibre or soft cloth.
Acidic substances like lemon juice, tomato sauce, vinegar etc. can damage the enamel if left too long.

STAINLESS STEEL, ALUMINIUM PARTS, PAINTED AND SILK-SCREEN PRINTED SURFACES

Clean using an appropriate product.
Always dry thoroughly.

IMPORTANT: these parts must be cleaned very carefully to avoid scratching and abrasion. You are advised to use a soft cloth and neutral soap.

CAUTION: Do not use abrasive substances or non-neutral detergents as these will irreparably damage the surface.

GAS TAPS

Periodic lubrication of the gas taps must be carried out by specialist personnel only.
In the event of operating faults in the gas taps, call the Service Department.

HOT PLATE

Foods burned on the hot plates must always be cleaned dry.
Do not use water to avoid the forming of rust.
After its use, pour a bit of oil onto the warm plate and rub with a cloth.

Attention

The appliance gets very hot, mainly around the cooking areas. It is very important that children are not left alone in the kitchen when you are cooking.

Do not use a steam cleaner because the moisture can get into the appliance thus make it unsafe.

Do not use harsh abrasive cleaners or sharp metal scrapers to clean the oven door glass or the glass lid (models with glass lid only) since they can scratch the surface, which may result in shattering of the glass.

BURNERS

They can be removed and washed with soapy water only.
They will remain always perfect if cleaned with products used for silverware.
After cleaning or wash, check that burner-caps and burner-heads are dry before placing them in the respective housings.

Check that the electrode "**S**" (fig. 5.2) next to each burner is always clean to ensure trouble-free sparking.

Note: The electrode "S" must be very carefully cleaned. To avoid damage to the electric ignition do not use it when the burners are not in place.

CORRECT REPLACEMENT OF THE BURNERS

It is very important to check that the burner flame distributor "**F**" and the cap "**C**" has been correctly positioned (see figs. 5.2 - 5.3) - failure to do so can cause serious problems.

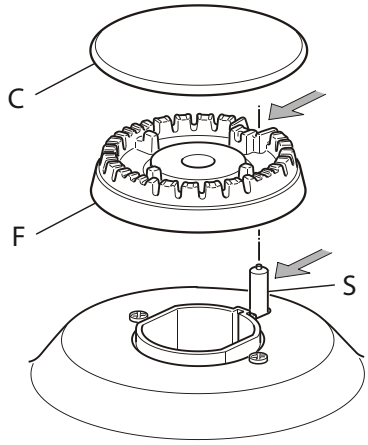

Fig. 5.2

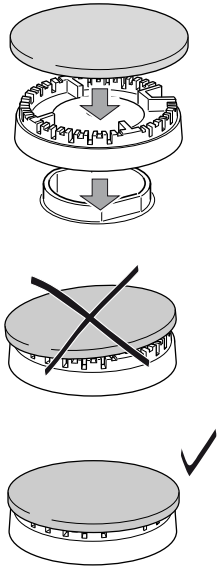

Fig. 5.3

FITTING THE OVEN SHELF

- The oven shelf is provided with a security block to prevent accidental extraction. It must be inserted operating as per figure 5.4.
- To pull it out operate in the inverse order.

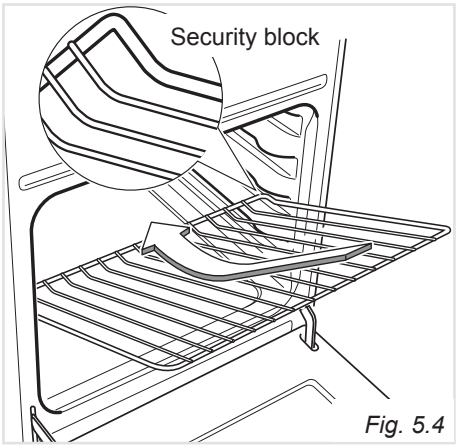

Fig. 5.4

OVEN DOOR (Only for models EK 55 .. 220, EK 55 .. 320)

The internal glass of the oven door can be easily removed for cleaning by unscrewing the two lateral fixing screws (fig. 5.5).

INSIDE OF OVEN

The oven should always be cleaned after use when it has cooled down.
The cavity should be cleaned using a mild detergent solution and warm water. Suitable proprietary chemical cleaners may be used after first consulting with the manufacturers recommendations and testing a small sample of the oven cavity. Abrasive cleaning agents or scouring pads/ cloths should not be used on the cavity surface.

NOTE: The manufacturers of this appliance will accept no responsibility for damage caused by chemical or abrasive cleaning.

Let the oven cool down and pay special attention no to touch the hot heating elements inside the oven cavity.

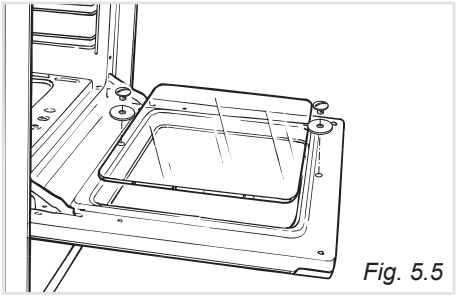
Fig. 5.5

STORAGE COMPARTMENT (OPTIONAL, SOME MODELS ONLY)

The storage compartment is accessible through the pivoting panel (fig. 5.6).

WARNING !!

Do not store flammable material in the oven or in the storage compartment.

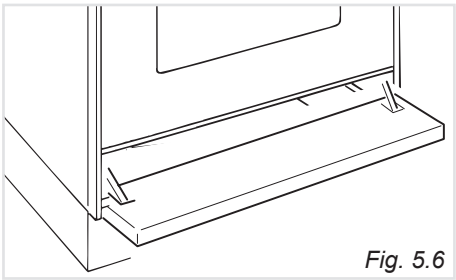
Fig. 5.6

REPLACING THE OVEN LAMP (MODELS WITH INCANDESCENT LAMP) (Only for the models EK 55 .. 220, EK 55 .. 320)

WARNING: Ensure the appliance is switched off and disconnected from the electrical power supply before replacing the lamp to avoid the possibility of electric shock.

- Let the oven cavity and the heating elements to cool down.
- Switch off the electrical supply.
- Remove the protective cover "**A**" (fig. 5.7a).
- Unscrew and replace the bulb "**B**" with a new one suitable for high temperatures (300°C) having the following specifications: 220-240V, 50/60Hz, E14 and same power (check watt power as stamped in the bulb itself) of the replaced bulb.
- Refit the protective cover.

Note: Oven bulb replacement is not covered by your guarantee.

REPLACING THE OVEN LAMP (MODELS WITH HALOGEN LAMP) (Only for the models EK 55 .. 220, EK 55 .. 320)

WARNING: Ensure the appliance is switched off and disconnected from the electrical power supply before replacing the lamp to avoid the possibility of electric shock.

- Let the oven cavity and the heating elements to cool down.
- Switch off the electrical supply.
- Remove the protective cover "**A**" (fig. 5.7b).
- Replace the halogen lamp "**C**" with a new one suitable for high temperatures (300°C) having the following specifications: 220-240V, 50/60Hz and same power (check watt power as stamped in the lamp itself) of the replaced lamp.

  IMPORTANT WARNING: Never replace the bulb with bare hands; contamination from your fingers can cause premature failure. Always use a clean cloth or gloves.
- Refit the protective cover.

Note: Oven lamp replacement is not covered by your guarantee.

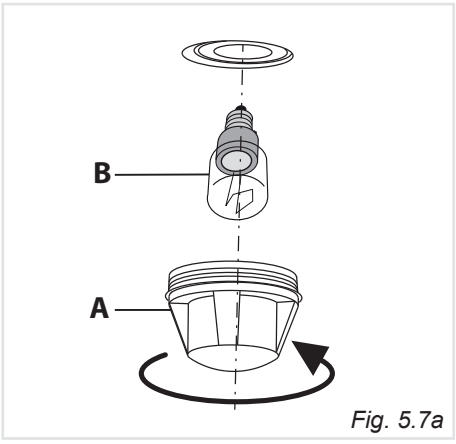

Fig. 5.7a

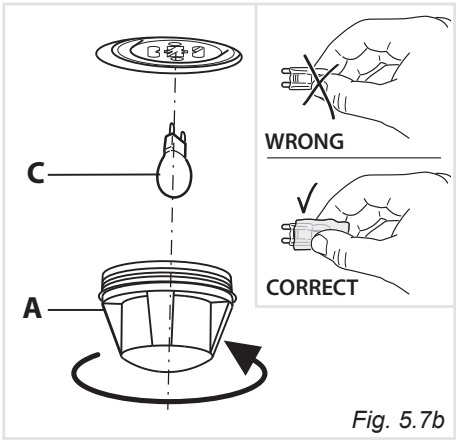

Fig. 5.7b

REMOVING THE OVEN DOOR

The oven door can easily be removed as follows:

- Open the door to the full extent (fig. 5.8a).
- Open the lever "**A**" completely on the left and right hinges (fig. 5.8b).
- Hold the door as shown in fig. 5.8.
- Gently close the door (fig. 5.8c) until left and right hinge levers "**A**" are hooked to part "**B**" of the door (fig. 5.8b).
- Withdraw the hinge hooks from their location following arrow "**C**" (fig. 5.8d).
- Rest the door on a soft surface.
- To replace the door, repeat the above steps in reverse order.

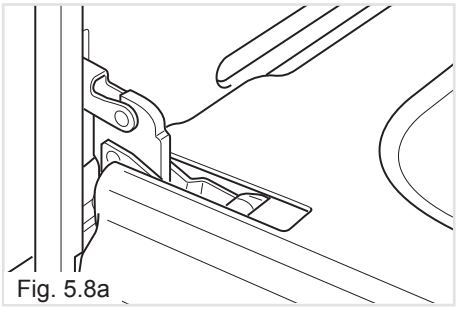

Fig. 5.8a

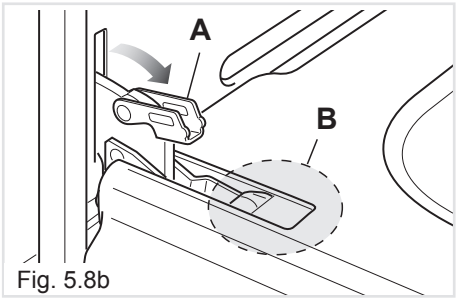

Fig. 5.8b

Important!

Always keep a safe distance from the door hinges, paying special attention to position of your hands.

If the door hinges are not correctly hooked, they could unhook and close suddenly and unexpectedly with risk of injury.

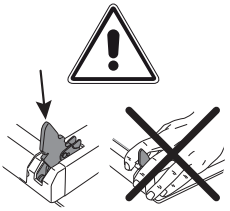

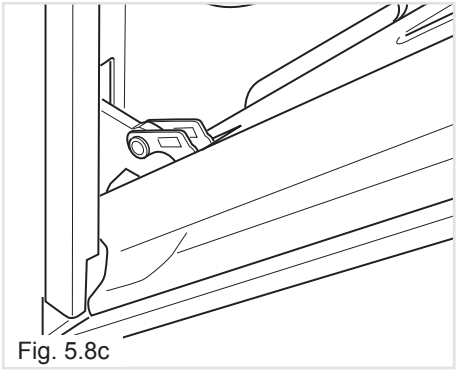

Fig. 5.8c

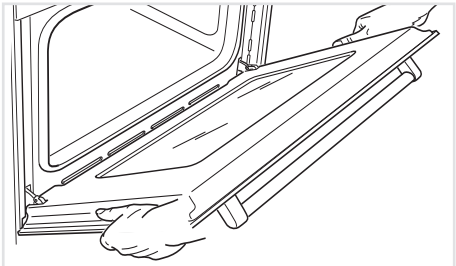

Fig. 5.8

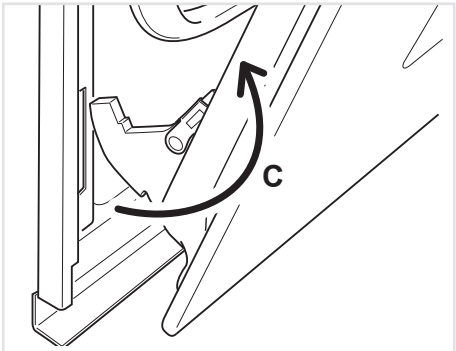

Fig. 5.8d

Advice for the installer

IMPORTANT

- Cooker installation must only be carried out by QUALIFIED TECHNICIANS and in compliance with local safety standards. Failure to comply with this condition will render the guarantee invalid.
- The appliance must be installed in compliance with regulations in force in your country and in observation of the manufacturer's instructions.
- This appliance is not connected to a device to evacuate the combustion products. This must be installed and connected in conformity with the installation rules in force. Pay special care to room ventilation as well.
- Always disconnect the appliance from the electrical supply before carrying out any maintenance operations or repairs.
- Some appliances are supplied with a protective film on steel and aluminium parts. **This film must be removed before using the cooker.**

6 INSTALLATION

The cookers afford class '1' protection against overheating of surrounding surfaces.
The installation conditions, concerning protection against overheating of the surfaces adjacent to the cooker, must conform to fig. 6.1 and 6.2.
The appliance must be kept no less than 300 mm away from any side wall which exceeds the height of the hob surface (fig. 6.1).
The appliance must be housed in heat resistant units.
The synthetic veneer materials and the glue used must be resistant to a temperature of 150°C in order to avoid ungluing or deformations.
Curtains must not be fitted immediatly behind appliance or within 500 mm of the sides.
If the cooker is located on a pedestal it is necessary to provide safety measures to prevent falling out.

The appliance must be housed in heat resistant units.

The walls of the units must not be higher than work top and must be capable of resisting temperatures of 75 °C above room temperature.

Do not instal the appliance near inflammable materials (eg. curtains).

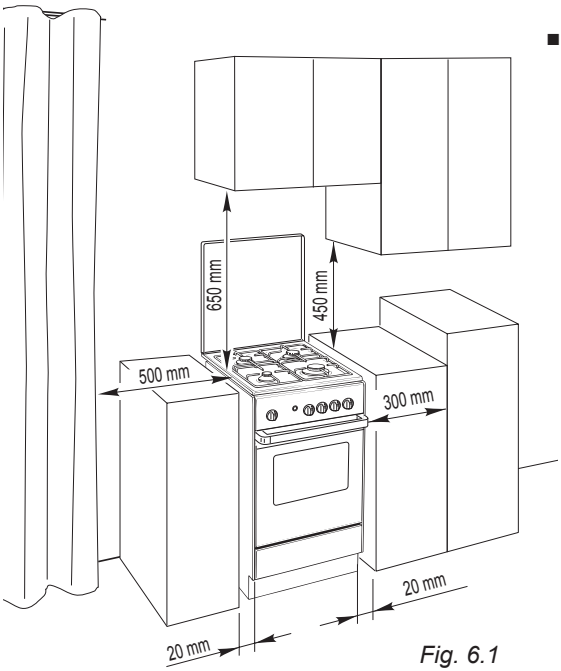

Fig. 6.1

- Gas connection made using rubber hose which must be visible and easily inspected or using rigid or flexible metal pipe.
  A space of at least 2 cm must be left between the cooker and any adjacent furniture, which must not exceed the height of the cooktop.

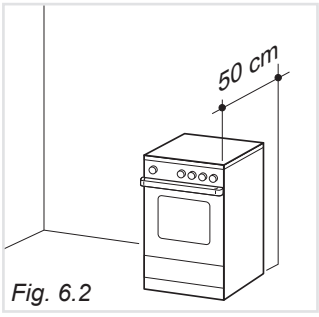

Fig. 6.2

VENTILATION REQUIREMENTS

The appliance must be installed in compliance with applicable local regulations concerning ventilation and the evacuation of exhaust gases.
Intensive and prolonged use may require extra ventilation, e.g. opening a window, or more efficient ventilation increasing the mechanical suction power if this is fitted.

CHOOSING SUITABLE SURROUNDINGS

The room where the gas appliance is to be installed must have a natural flow of air so that the gas can burn (in compliance with applicable local regulations).
The flow of air must come directly from one or more openings made in the outside walls with a free area of at least 200 cm^2 (or refer to applicable local regulations).
The openings should be near the floor and preferably on the side opposite the exhaust for combustion products and must be made so that they cannot be blocked from either the inside or the outside.
When these openings cannot be made, the necessary air can come from an adjacent room which is ventilated as required, as long as it is not a bed room or a danger area (in compliance with applicable local regulations).
In this case, the kitchen door must allow the passage of the air.

DISCHARGING PRODUCTS OF COMBUSTION

Extractor hoods connected directly to the outside must be provided, to allow the products of combustion of the gas appliance to be discharged (fig. 6.3).
If this is not possible, an electric fan may be used, attached to the external wall or the window; the fan should have a capacity to circulate air at an hourly rate of 3-5 times the total volume of the kitchen (fig. 6.4).
The fan can only be installed if the room has suitable vents to allow air to enter, as described under the heading “Choosing suitable surroundings”.

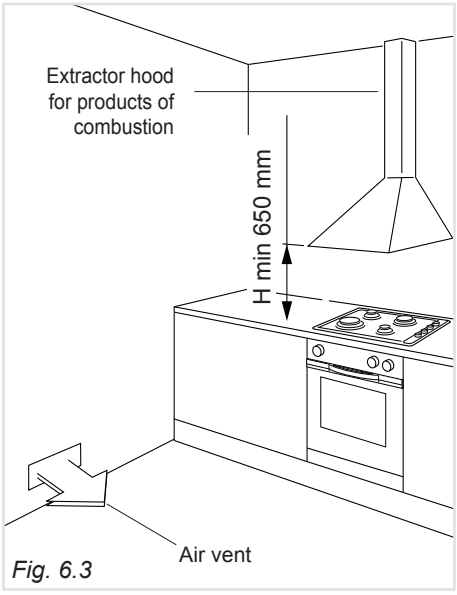

Fig. 6.3

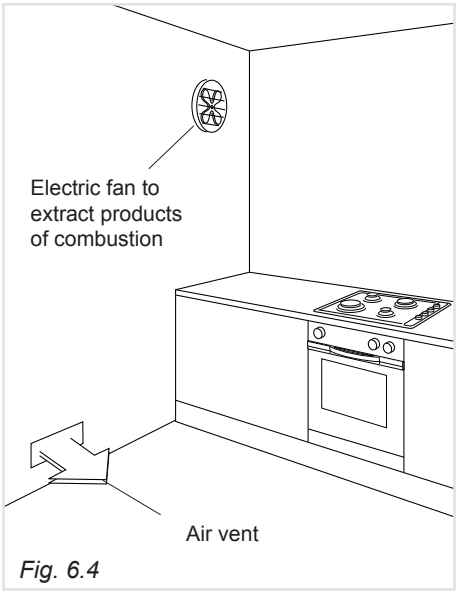

Fig. 6.4

7 GAS SECTION

GAS INSTALLATION REQUIREMENTS

Important !

- **The walls adjacent to the cooker must be of heat-resistant material.**
- **Before installation, make sure that the local distribution conditions (gas type and pressure) and the adjustment of this appliance are compatible. The appliance adjustment conditions are given on the plate or the label.**
- **This appliance must be installed and serviced only by a suitably qualified, registered installer. The installer shall refer to the local standards in force.**
- **Failure to install the appliance correctly could invalidate any manufacturer's warranty.**

CONNECTING THE APPLIANCE TO THE GAS SUPPLY

Cat: I 3+

The appliance is predisposed and adjusted to operate with the gas G30/G31 (LPG).

The gas connection must be carried out by an authorised person according to the relevant standards.
Ensure that the room in which the cooker is to be installed is adequately ventilated, in compliance with applicable regulations.

- Connect the cooker to the gas mains utilizing rigid or flexible pipes.
- The connection must be executed to the rear of appliance (fig. 7.1); the pipe does not cross the cooker.

Fig. 7.1

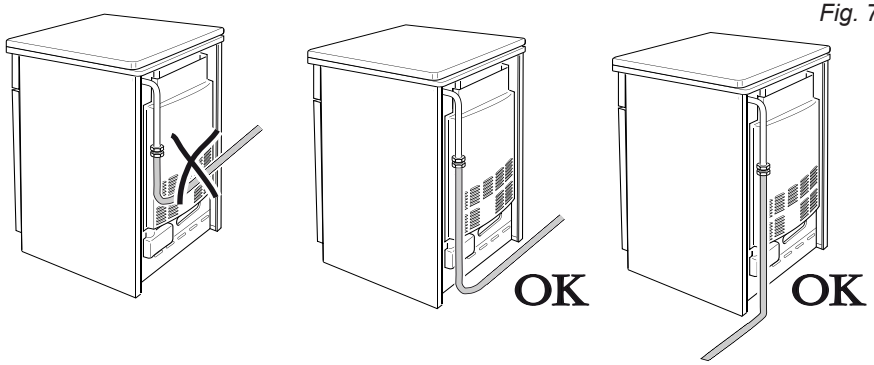

**THE PIPE DOES NOT CROSS THE REAR PANEL OF THE COOKER.
IN CASE OF CROSSING THE BACK PANEL, ENSURE THE PIPE IS POSITIONED CLOSE TO THE BOTTOM PART OF THE APPLIANCE.**

GAS CONNECTION WITH A RUBBER HOSE

Imporant!

A rubber hose connection shall only be made if permitted by the applicable local regulations.

The gas connection is made up of:

- the terminal fitting of the inlet pipe;
- sealing washer;
- the appropriate hose holder.

Connecting the cooker to LPG

1. If not already fitted, fit the LPG hose holder on the inlet pipe, making sure that you place the sealing washer between them (as shown in fig. 7.2).
2. Connect the cooker to the gas supply using a suitable rubber hose (internal diameter 6 mm).
   The hose must comply with the applicable local regulations and be of the correct construction for the type of gas being used.
3. Make sure that the hose is tightly and securely fitted at both ends.
4. Use a standard hose clamp (not supplied) to fasten the hose.
5. Install a gas pressure regulator.

Important!

To comply with applicable local regulations, a gas pressure regulator (conforming to the local regulations in force) must be installed when connecting the cooker to an LPG cylinder.

When connecting the cooker to the gas supply with a rubber hose, make sure that

- the hose is as short as possible, without twists or kinks.
- the hose is not longer than 750 mm (or refer to applicable local regulations) and does not come into contact with sharp edges, corners or moving parts. Use a single rubber hose only; never connect the appliance with more than one rubber hose.
- the hose is not under tension, twisted, kinked, or too tightly bent, neither while the appliance is in use nor while it is being connected or disconnected.
- the hose does not come into contact with any part of the cooker with a surface temperature of 70°C or above (or refer to applicable local regulations).
- the hose is not subject to excessive heat by direct exposure to flue products or by contact with hot surfaces.
- the hose can easily be inspected along its entire length to check its condition.
- the hose is replaced at the printed due date or if it shows signs of wear or damage, and replaced regardless of its condition after a maximum of three years.
- you inform the customer that the gas cylinder valve or the gas supply valve immediately by the cooker should be closed when the cooker is not in use.
- you inform the customer that the hose should not be subjected to corrosion by acidic cleaning agents.

After connecting the cooker to the gas supply, make sure that you

- check that the connections are correctly sealed using a soapy solution, but never a naked flame.
- check whether the injectors are correct for the type of gas being used.
- replace the sealing washer on the slightest sign of deformation or imperfection. The sealing washer is the part which guarantees a good seal in the gas connection.
- use two spanners when fitting the hose holder (fig. 7.2).

Gas connection with rubber hose holder
Note: if not already fitted on the inlet pipe,
the hose holder is supplied with the product in a separate kit
(Important: to be used ONLY IF PERMITTED by the local applicable regulations)

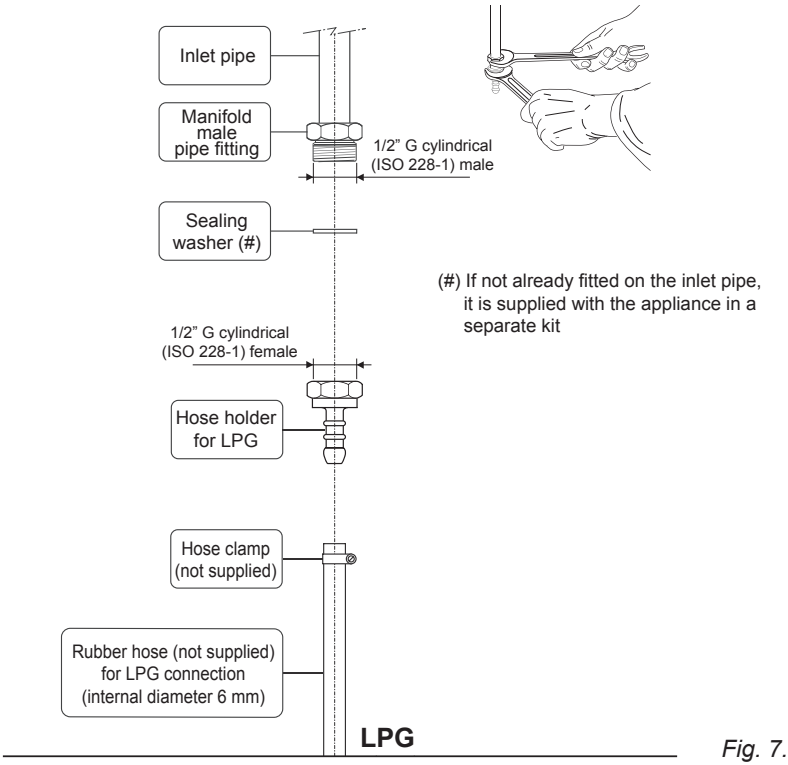

Fig. 7.2

GAS CONNECTION WITH RIGID PIPES OR A FLEXIBLE PIPE

The gas connection is made up of:
- the terminal fitting of the inlet pipe
- sealing washer.

Important!

If fitted, remove the hose holder from the terminal fitting of the inlet pipe.

When connecting the cooker to the gas supply with rigid pipes or a flexible pipe, make sure that
- you use rigid pipes or a flexible pipe complying with applicable local regulations. The flexible pipe shall be of the correct construction for the type of gas being used.
- if compression fittings are used, you tighten them firmly using two spanners (fig. 7.3).
- the connection with rigid metal pipes does not cause stress or pressure to the gas piping.
- the flexible pipe is not under tension, twisted, kinked or too tightly bent, neither while the appliance is in use nor while it is being connected or disconnected.

- the flexiple pipe does not exceed 2000 mm in length (or refer to applicable local regulations) and does not come into contact with sharp edges, corners or moving parts. Use a single flexible pipe only; never connect the cooker with more than one flexible pipe.
- the flexible pipe can easily be inspected along its entire length to check its condition; if it has an expiry date, it should be replaced before that date.
- if using a flexible pipe which is not entirely made of metal, make sure that it does not come into contact with any part of the cooker with a surface temperature of 70°C or above (or refer to applicable local regulations).
- the hose is not subject to excessive heat by direct exposure to flue products or by contact with hot surfaces.
- the rigid or flexible pipe is replaced if it shows signs of wear or damage.
- a gas pressure regulator, in compliance with the applicable local regulations, is installed when connecting to an LPG cylinder.
- you inform the customer that the cylinder valve or the supply valve immediately by the appliance should be closed when the cooker is not in use.
- you inform the customer that the rigid or flexible pipe should not be subjected to corrosion by acidic cleaning agents.

After connecting the cooker to the gas supply, make sure that you

- check that the connections are correctly sealed using a soapy solution, but never a naked flame.
- check whether the injectors are correct for the type of gas being used.
- replace the sealing washer on the slightest sign of deformation or imperfection. The sealing washer is the part which guarantees a good seal in the gas connection.
- use two spanners when connecting the rigid or flexible pipe (fig. 7.3).

Gas connection with rigid or flexible pipe

Note: if already fitted on the inlet pipe, remove the rubber hose holder

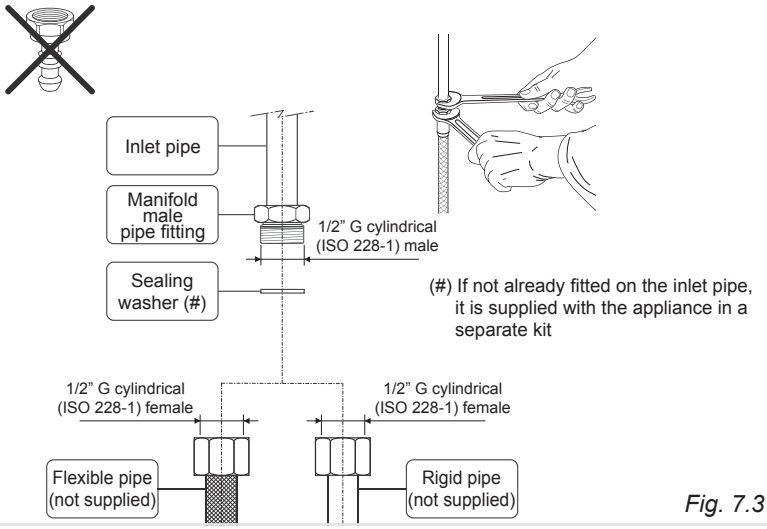

Fig. 7.3

GAS MAINTENANCE

TABLE FOR THE CHOICE OF THE INJECTORS - Cat: I 3+				
BURNERS	Nominal Power [kW]	Reduced Power [kW]	LPG G30 28-30 mbar G31 37 mbar	
			Ø injector [1/100 mm]	Ring opening [mm]
Auxiliary (A)	1,00	0,30	50	-
Semi-rapid (SR)	1,75	0,45	66	-
Rapid (R)	3,00	0,75	87	-
Oven	3,20	0,85	86	Fully open(*)
Grill	2,00	-	72	Fully open(*)

(*) Reference value

AIR VENT NECESSARY FOR GAS COMBUSTION = (2 m^3/h x kW)	
BURNERS	Air necessary for combustion [m^3/h]
Auxiliary (A)	2,00
Semi-rapid (SR)	3,50
Rapid (R)	6,00
Oven (thermostat)	6,40
Grill	4,00

LUBRICATION OF THE GAS TAPS

- In case of difficulty in the gas taps operation, call Service.

IMPORTANT

All intervention regarding installation maintenance of the appliance must be fulfilled with original factory parts.
The manufacturer declines any liability resulting from the non-compliance of this obligation.

REPLACEMENT OF THE INJECTORS OF THE BURNERS

The injectors can be obtained from the "Service Centre".

Select the injectors to be replaced according to the "Table for the choice of the injectors".

The nozzle diameters, expressed in hundredths of a millimetre, are marked on the body of each injector.

REPLACEMENT OF THE INJECTORS OF THE COOKTOP BURNERS

Select the injectors to be replaced according to the "Table for the choice of the injectors".

To replace the injectors proceed as follows:

- Remove pan supports and burners from the cooktop.
- Using a wrench, substitute the nozzle injectors "**J**" (fig. 7.4) with those most suitable for the kind of gas for which it is to be used.

The burners are conceived in such a way so as not to require the regulation of the primary air.

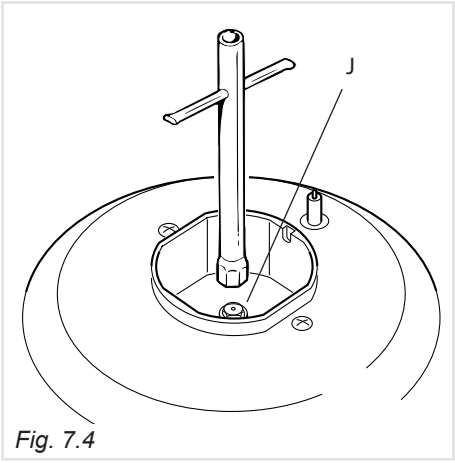

Fig. 7.4

ADJUSTING OF THE MINIMUM OF THE TOP BURNERS

In the minimum position the flame must have a length of about 4 mm and must remain lit even with a quick turn from the maximum position to that of minimum.

The flame adjustment is done in the following way:

- Turn on the burner.
- Turn the tap to the MINIMUM position.
- Take off the knob.
- With a small flat screwdriver turn the screw inside the tap rod to the correct regulation (fig. 7.5).

Normally for LPG, tighten up the regulation screw.

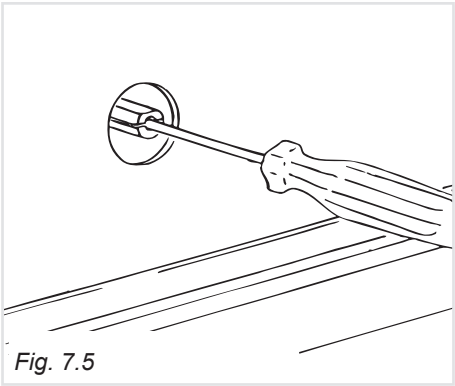
Fig. 7.5

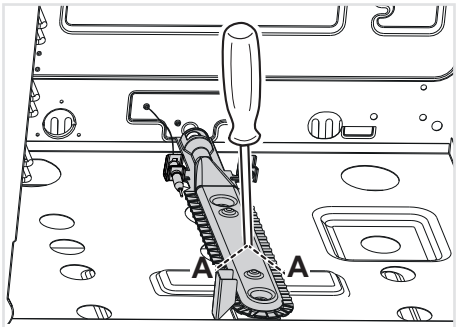

Fig. 7.6

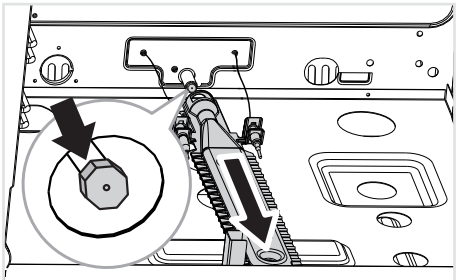
Fig. 7.7

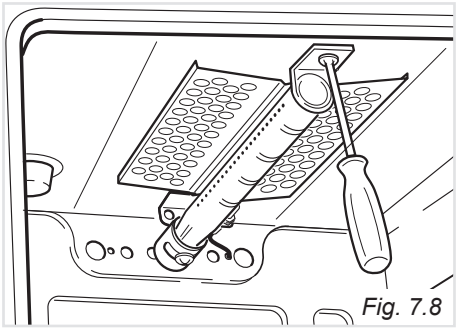
Fig. 7.8

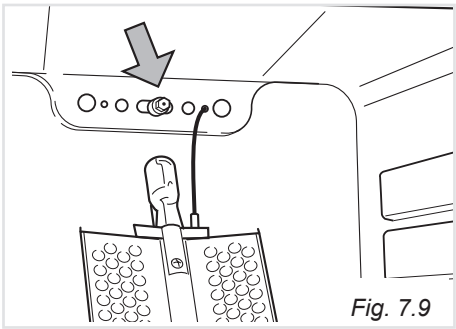
Fig. 7.9

OPERATIONS TO BE EXECUTED FOR THE REPLACEMENT OF THE INJECTORS OF THE OVEN AND GRILL BURNERS

Select the injectors to be replaced according to the “Table for the choice of the injectors”.
The nozzle diameters, expressed in hundredths of a millimetre, are marked on the body of each injector.

OVEN BURNER

- Lift and remove the lower panel inside the oven.
- Unscrew and remove the burner securing screws “**A**” (fig. 7.6).
- Withdraw the burner as shown in figure 7.7 and rest it inside the oven. Take care not to damage the wire to the ignition electrode and the safety valve probe (only for the models E K55..220, E K55..320).
- Using a 7 mm box spanner, unscrew the injector (indicated by the arrow in fig. 7.7) and replace it with a new one selected in accordance with the “Table for the choice of the injectors”.
- Replace the burner repeating the above steps in reverse order.
  IMPORTANT: Check the correct operation of the safety valve probe.

GRILL BURNER

- Remove the burner by unscrewing the front screw (fig. 7.8).
  Gently suspend the burner as shown in figure 7.9.
  Take care not to damage the wire to the ignition electrode and the safety valve probe (only for the models E K55..220, E K55..320).
- Using a 7 mm box spanner, unscrew the injector (indicated by the arrow in fig. 7.9) and replace it with a new one selected in accordance with the “Table for the choice of the injectors”.
- Replace the burner repeating the above steps in reverse order.
  IMPORTANT: Check the correct operation of the safety valve.

ADJUSTMENT OF THE OVEN BURNER MINIMUM

This needs to be done only for the oven burner (the grill is a fixed capacity) by acting on the thermostat.

Considering that in the minimum position the flame must have a length of about 4 mm and must remain lit even with a brusque passage from the maximum position to that of minimum.

The flame adjustment is done in the following way:

- turn on the burner by setting the thermostat knob on position **10**;
- remove the knob and unscrew the bypass screw "**G**" (fig. 7.10) about three times by passing a small flat screwdriver (Ø 3 mm blade, 100 mm length) through the panel opening;
- re-mount the knob and let the oven heat up for about 10 minutes, then bring the knob to position **1** (minimum) to operate the thermostat by-pass;
- after having removed the knob again and being very careful not to turn the tap rod, slowly screw the by-pass screws "**G**" (fig. 7.10) until you obtain a flame of 3-4 mm in height.

Normally for LPG, tighten up the regulation screw.

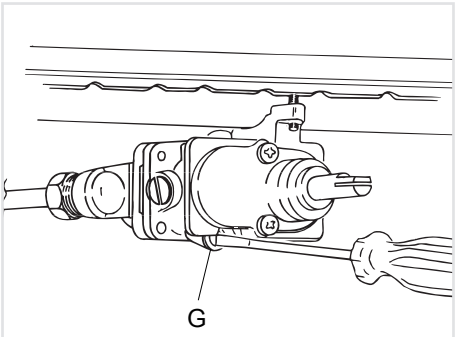

Fig. 7.10

8 ELECTRICAL SECTION

IMPORTANT: The cooker must be installed in accordance with the manufacturer's instructions.
Incorrect installation, for which the manufacturer accepts no responsibility, may cause damage to persons, animals and things.

GENERAL

- Connection to the mains must be carried out by qualified personnel in accordance with current regulations.
- The appliance must be connected to the mains checking that the voltage corresponds to the value given in the rating plate and that the electrical cable sections can withstand the load specified on the plate.
- Models supplied with plug: The plug must be connected to an earthed socket in compliance with safety standards.
- Models supplied without plug: The appliance is supplied without a power supply plug and therefore if you are not connecting directly to the mains, a standardized plug suitable for the load must be fitted.
- The appliance can be connected directly to the mains placing an omnipolar switch with minimum opening between the contacts of 3 mm between the appliance and the mains.
- The power supply cable must not touch the hot parts and must be positioned so that it does not exceed 75°C at any point.
- Once the appliance has been installed, the switch or socket must always be accessible.
- If the power supply cable is damaged it must be substituted by a suitable cable available in the after sales service.

N.B. For connection to the mains, do not use adapters, reducers or branching devices as they can cause overheating and burning.

If the installation requires alterations to the domestic electrical system or if the socket and appliance plug are incompatible, call an expert.
He should also check that the socket cable section is suitable for the power absorbed by the appliance.

Before effecting any intervention on the electrical parts of the appliance, the connection to the network must be interrupted.

The connection of the appliance to earth is mandatory.
The manufacturer declines all responsability for any inconvenience resulting from the inobservance of this condition.

ELECTRICAL FEEDER CABLE CONNECTION

WARNING: If the power supply cable is damaged, it must be replaced only by an authorised service agent in order to avoid a hazard.

To connect the supply cable:

- Remove the screws securing the cover "**A**" on the rear of the cooker (fig. 8.1).
- Feed the supply cable through the cable clamp "**C**" (fig. 8.1). The supply cable must be of a suitable size for the current requirements of the appliance; see the section "Feeder cable specifications".
- Connect the wires to the terminal block "**B**" as shown in the diagram in figure 8.2.
- Take up any slack in the cable and secure with the cable clamp "**C**".
- Replace the cover "**A**".

Note: The earth conductor must be left about 3 cm longer than the others.

FEEDER CABLE SECTION

Models E K55..220, E 5540FG2-..
220 V ac 60 Hz AWG18/3

Models E 5531FG2-.. , E K55..320
220 V ac 60 Hz AWG14/3

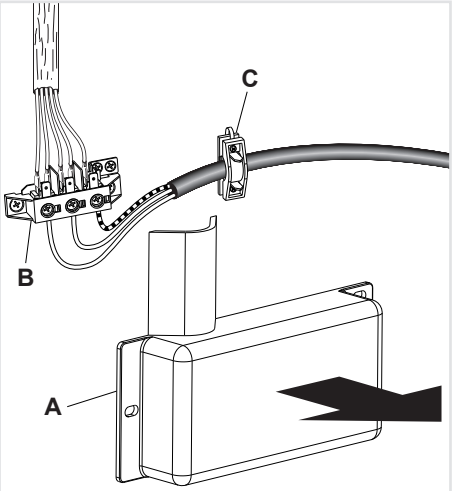

Fig. 8.1

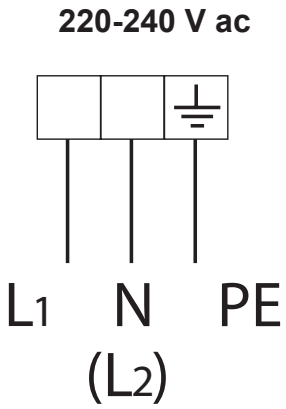

Fig. 8.2

The manufacturer cannot be held responsible for possible inaccuracies due to printing or transcription errors in the present booklet.
The manufacturer reserves the right to make all modifications to its products deemed necessary for manufacturer commercial reasons at any moment and without prior notice, without jeopardising the essential functional and safety characteristics of the appliances.

www.elba-cookers.it

ELBA

TALENT FOR COOKING

Made in Italy

Cod. 1105158 - ß0